BAS116-EVL

SURFACE MOUNT, LOW LEAKAGE SWITCHING DIODES

VENKEL LTD.

PART NUMBER	PACKAGE	VOLTAGE	POWER	CIRCUIT CONFIGURATION
BAS116-□VL E = 7" Embossed T&R (3,000) U = 13" Embossed T&R (12,000)	SOT-23	100V	250mW	SINGLE

FEATURES:

- Surface mount package ideally suited for automatic insertion.
- Very low leakage current. 2pA typical at V_R=75V.
- Low capacitance. 2pF max at V_R=0V, f=1MHz

MECHANICAL DATA:

- Case: SOT-23, Plastic
- Terminals: Solderable per MIL-STD-750, Method 2026
- Approx. Weight: 0.0003 ounces, 0.0084 grams
- Marking: PA

SINGLE

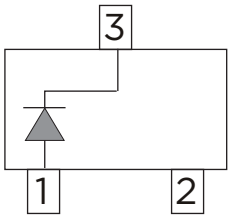

SOT-23

Units: inch (mm)

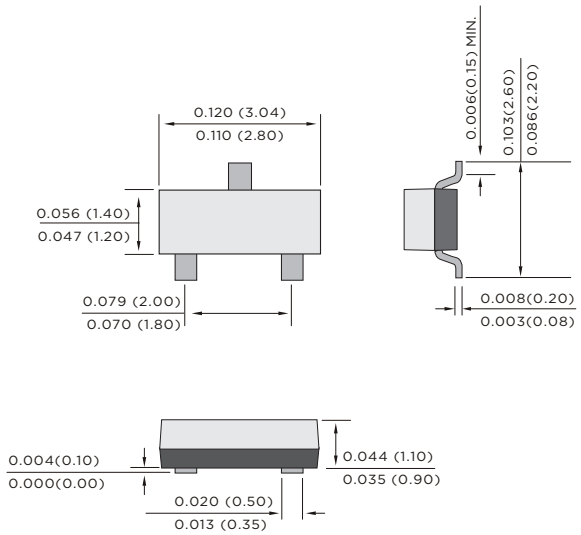

ABSOLUTE RATING (each diode)

PARAMETER	SYMBOL	VALUE	UNITS
Reverse Voltage	V_R	75	V
Peak Reverse Voltage	V_{RM}	100	V
Continuous Forward Current	I_F	0.2	A
Non-Repetitive Peak Forward Surge Current at t=1.0us	I_{FSM}	4.0	A

THERMAL CHARACTERISTICS

PARAMETER	SYMBOL	VALUE	UNITS
Power Dissipation (Note 1)	P_{TOT}	250	mW
Thermal Resistance, Junction to Ambient (Note 1)	$R_{\theta JA}$	500	˚C/W
Junction Temperature	T_J	-55 to +150	˚C
Storage Temperature	T_{STG}	-55 to +150	˚C

NOTES:

1. FR-5 Board = 1.0 x 0.75 x 0.062 in.

ENVIRONMENTAL INFORMATION

RoHS Status	10 of 10 Compliant
REACH Status	Compliant
Halogen Status	Halogen Free
Conflict Mineral Status	Conflict Mineral Free
Moisture Sensitivity Level (MSL)	1

RoHS Compliant
REACH Compliant
HF Halogen FREE
Conflict Minerals FREE 3TG

ELECTRICAL CHARACTERISTICS

MAXIMUM RATINGS AND ELECTRICAL CHARACTERISTICS (EACH DIODE), (T_A=25˚C UNLESS OTHERWISE NOTED)

PARAMETER	SYMBOL	TEST CONDITION	MIN.	TYP.	MAX.	UNITS
Reverse Breakdown Voltage	$V_{(BR)}$	I_R=100uA	75	-	-	V
Reverse Current	I_R	V_R=75V V_R=75V, T_J=150˚C	- -	0.002 8.0	5 80	nA
Forward Voltage	V_F	I_F=1mA I_F=10mA I_F=50mA I_F=150mA	- - - -	- - - -	0.9 1.0 1.1 1.25	V
Total Capacitance	C_J	V_R=0, f=1MHz	-	-	2.0	pF
Reverse Recovery Time	T_{rr}	I_F=I_R=10mA, R_L=100Ω	-	-	3.0	us

CHARACTERISTIC CURVES (each diode)

Fig.1 Reverse Leakage vs. Junction Temperature

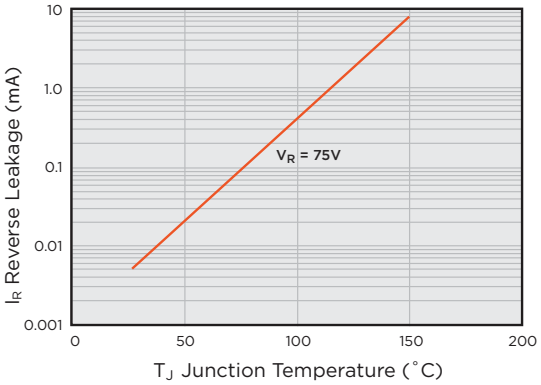

Fig.2 Forward Current vs. Forward Voltage

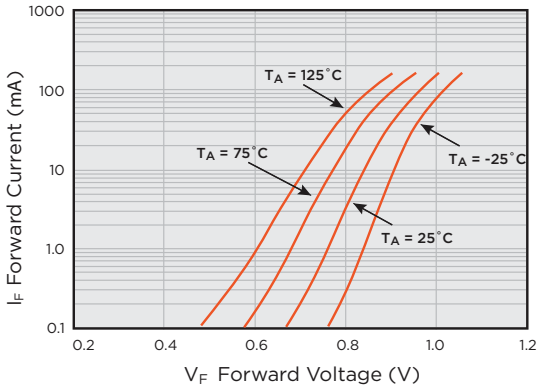

Fig.3 Total Capacitance vs. Reverse Voltage

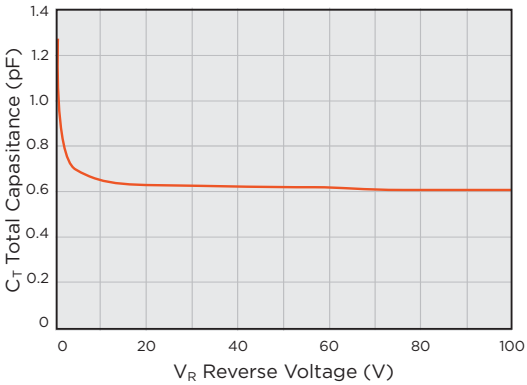

MOUNTING PAD LAYOUT
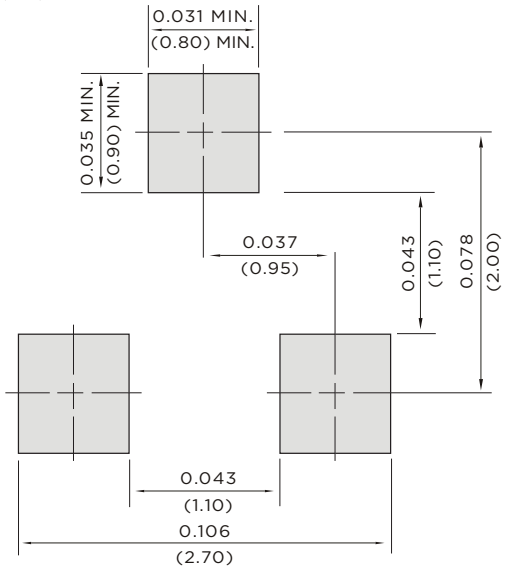
Units: inch (mm)